Exp-5

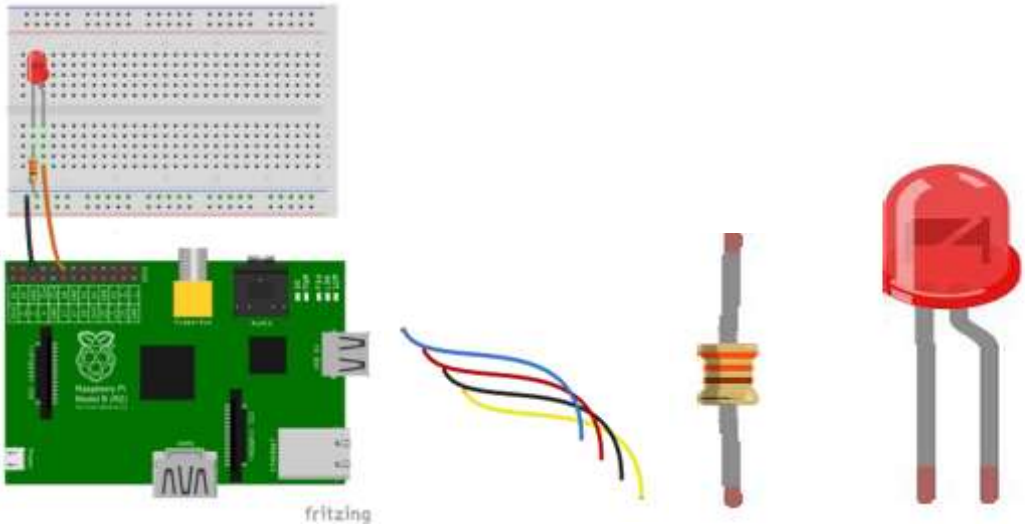
fritzing

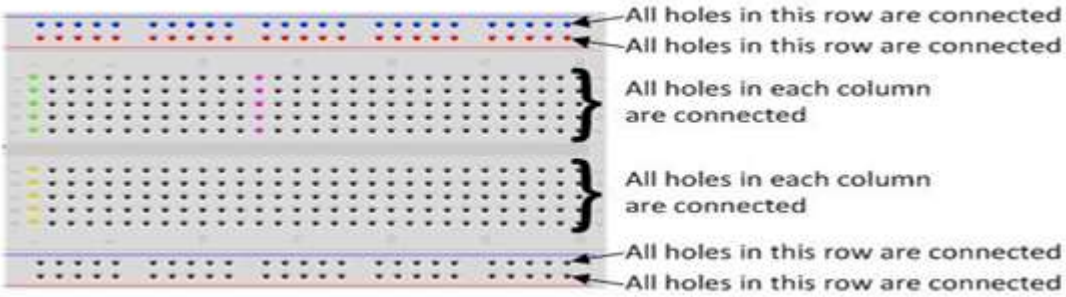
All holes in this row are connected
All holes in this row are connected
All holes in each column are connected
All holes in each column are connected
All holes in this row are connected
All holes in this row are connected

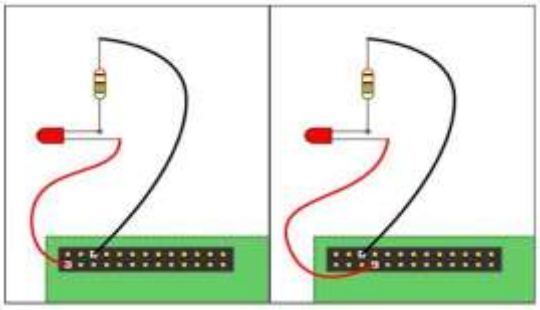

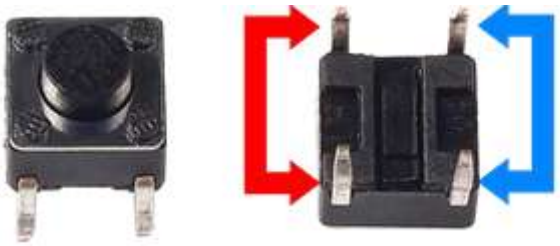

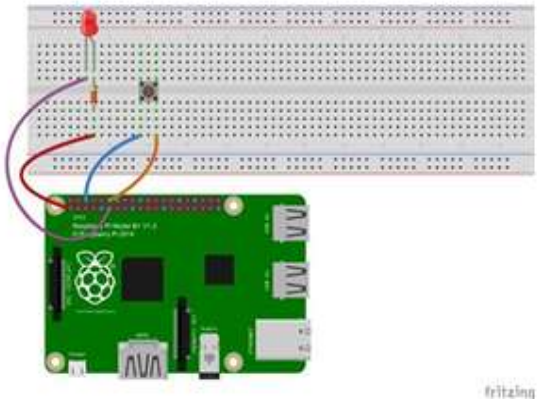
fritzing

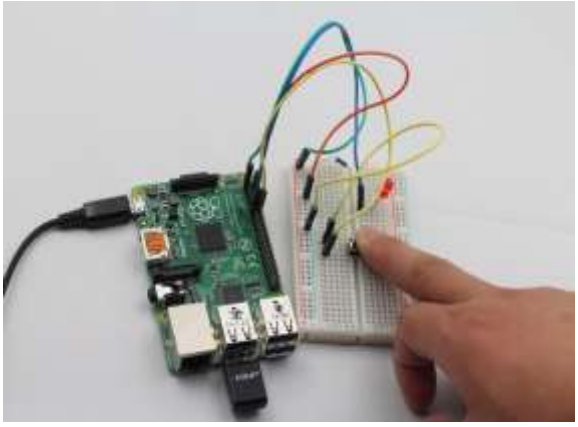

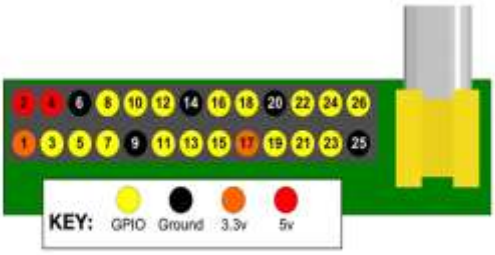
KEY:
GPIO
Ground
3.3v
5v

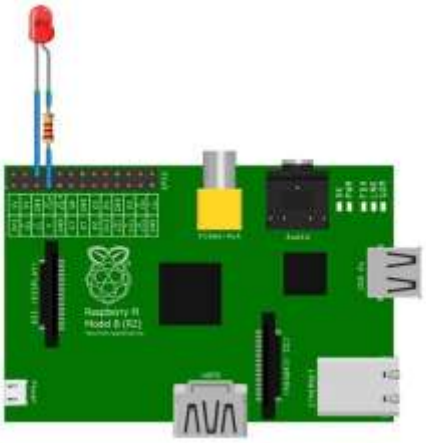

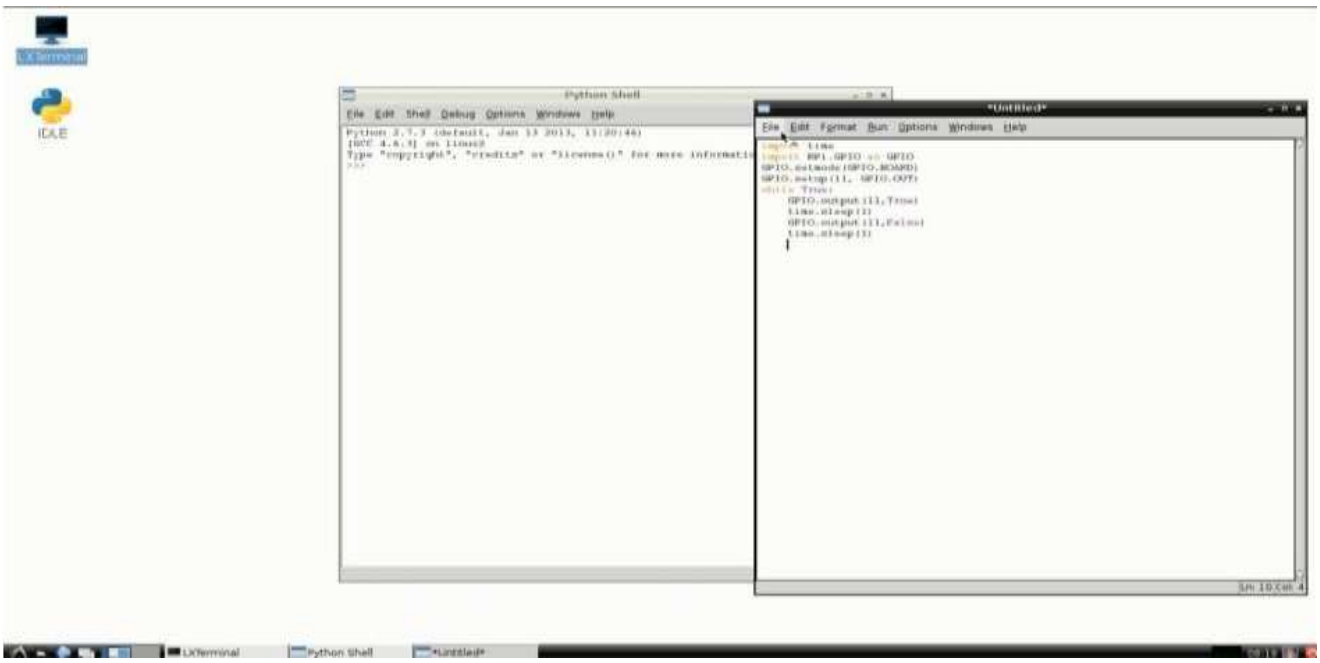
LXTerminal
IDLE
Python Shell
File Edit Shell Debug Options Windows Help
Untitled
File Edit Format Run Options Windows Help
import RPi.GPIO as GPIO
GPIO.setmode(GPIO.BOARD)
GPIO.setup(11, GPIO.OUT)
while True:
GPIO.output(11,True)
time.sleep(1)
GPIO.output(11,False)
time.sleep(1)
Ln: 10 Col: 4
LXTerminal
Python Shell
Untitled

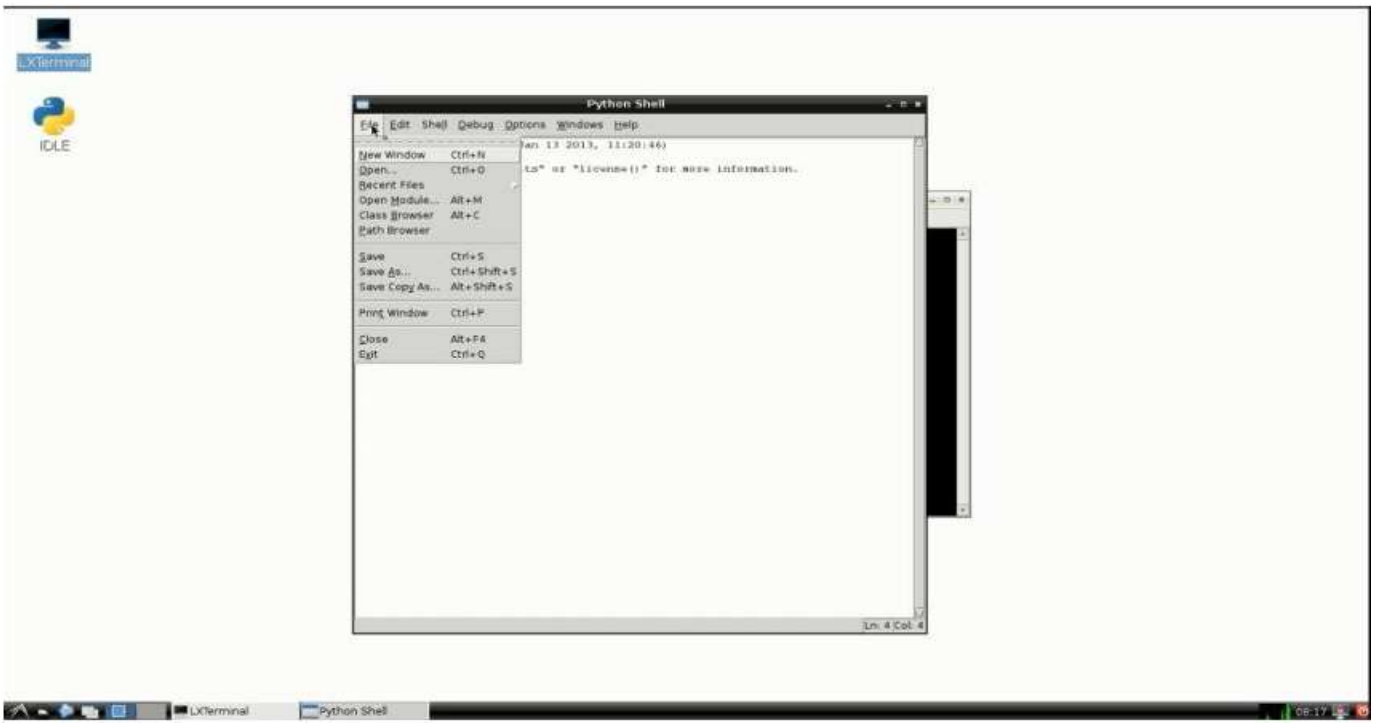
LXTerminal
IDLE
Python Shell
File Edit Shell Debug Options Windows Help
New Window Ctrl+N
Open... Ctrl+O
Recent Files
Open Module... Alt+M
Class Browser Alt+C
Path Browser
Save Ctrl+S
Save As... Ctrl+Shift+S
Save Copy As... Alt+Shift+S
Print Window Ctrl+P
Close Alt+F4
Exit Ctrl+Q
Ln: 4 Col: 4
LXTerminal
Python Shell

LXTerminal
IDLE
Python Shell
File Edit Shell Debug Options Windows Help
Python 2.7.3 (default, Jan 13 2013, 11:20:46)
[GCC 4.6.3] on linux2
Type "copyright", "credits" or "license()" for more information.
>>>
Ln: 4 Col: 4
LXTerminal
Python Shell

LXTerminal
IDLE
LXTerminal
File Edit Tabs Help
LXTerminal

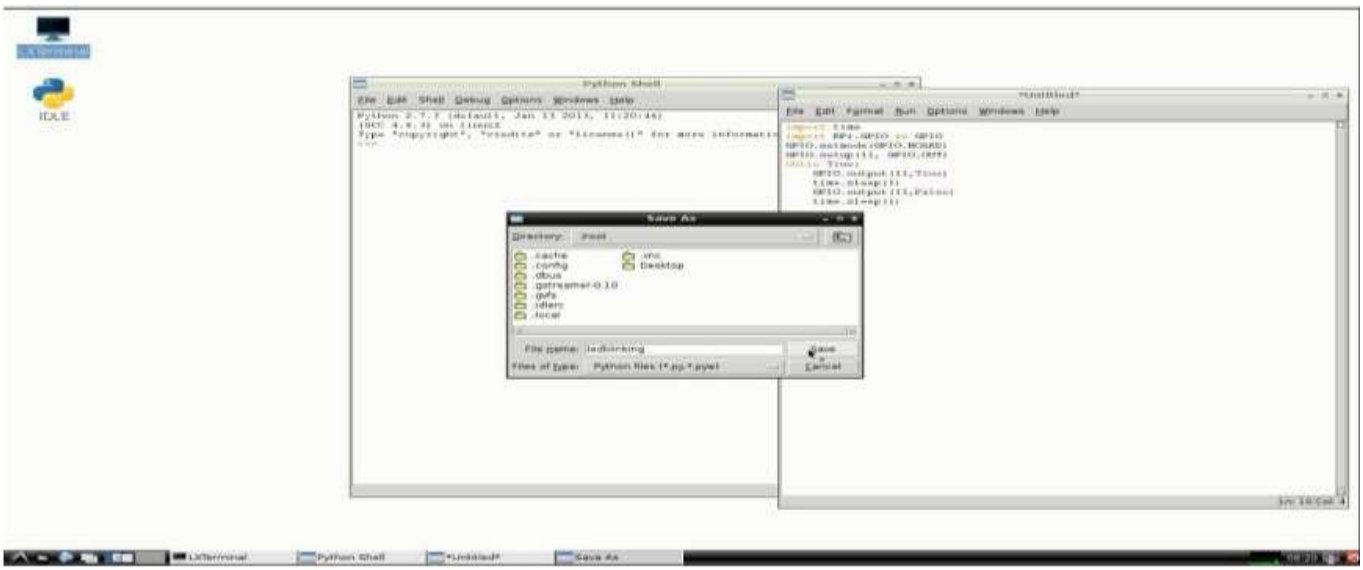
LXTerminal
IDLE
Python Shell
File Edit Shell Debug Options Windows Help
Python 2.7.3 (default, Jan 13 2013, 11:20:46)
[GCC 4.6.3] on linux2
Type "copyright", "credits" or "license()" for more informati
>>>
untitled
File Edit Format Run Options Windows Help
import time
import RPI.GPIO as GPIO
GPIO.setmode(GPIO.BOARD)
GPIO.setup(11, GPIO.OUT)
while True:
GPIO.output(11,True)
time.sleep(1)
GPIO.output(11,False)
time.sleep(1)
Ln: 18 Col: 4
Save As
Directory: /root
.cache
.config
.dbus
.gstreamer-0.10
.gvfs
.idlerc
.local
.nfs
Desktop
File name: indirbing
Files of type: Python files (*.py,*.pyw)
Save
Cancel
LXTerminal
Python Shell
untitled
Save As

Raspberry Pi LED Controller
TOGGLE
ezgif.com-crop

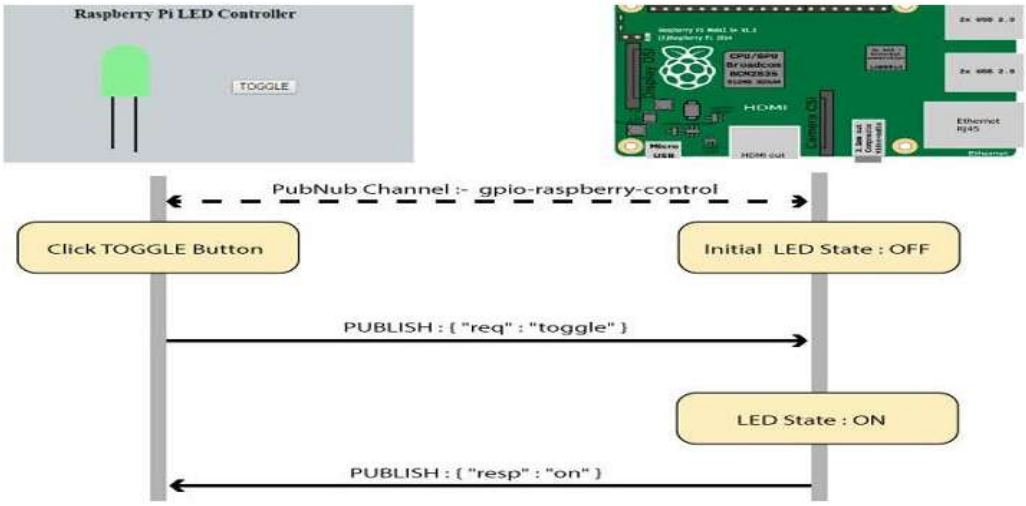
Raspberry Pi LED Controller
TOGGLE
PubNub Channel :- gpio-raspberry-control
Click TOGGLE Button
Initial LED State : OFF
PUBLISH : { "req" : "toggle" }
LED State : ON
PUBLISH : { "resp" : "on" }

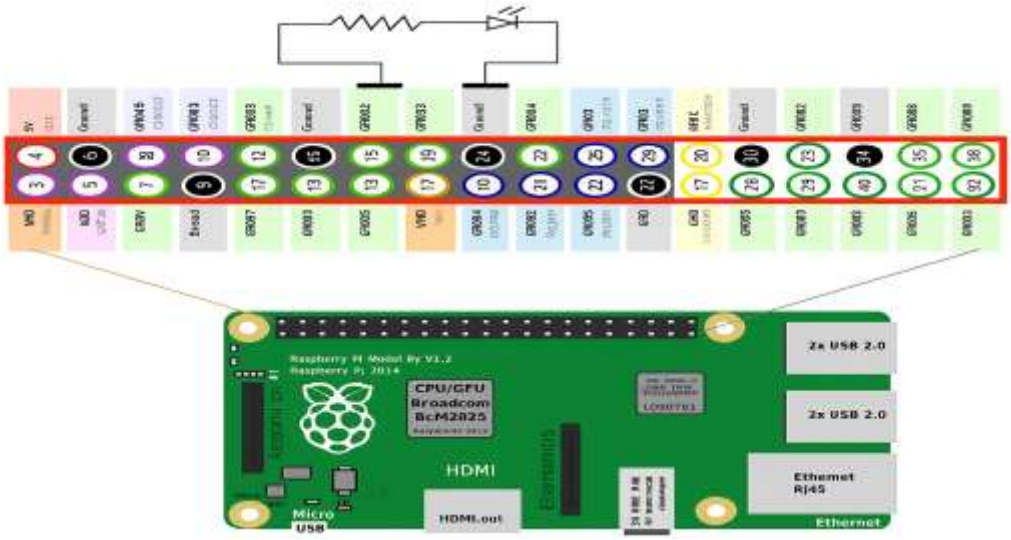
CPU/GPU
Broadcom
BcM2835
HDMI
HDMI out
Micro
USB
2x USB 2.0
2x USB 2.0
Ethernet
RJ45
Ethernet

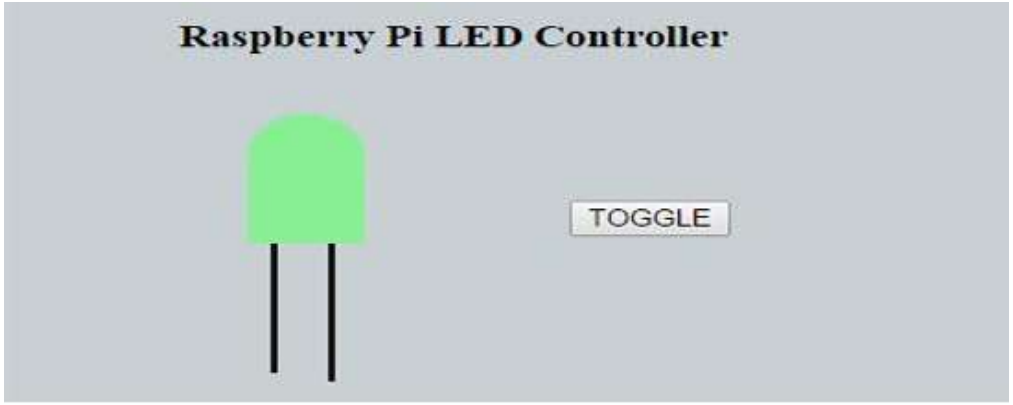
Raspberry Pi LED Controller
TOGGLE

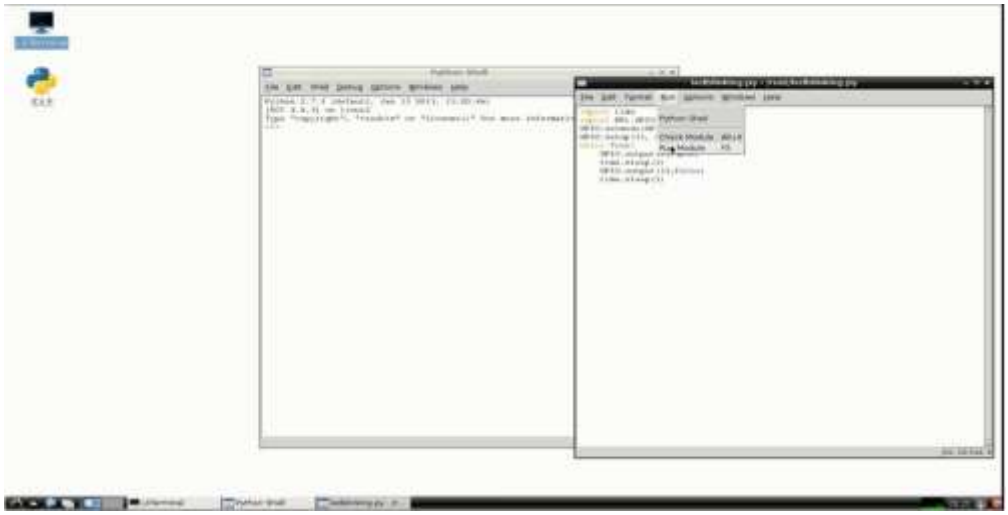

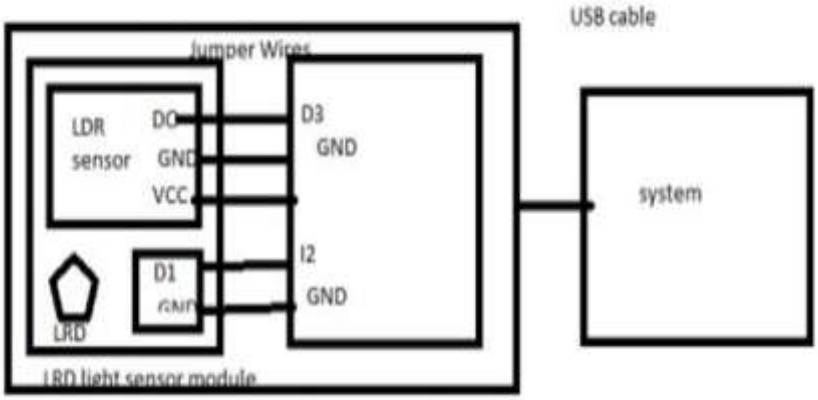
USB cable
Jumper Wires
LDR
sensor
DO
GND
VCC
D3
GND
I2
GND
D1
GND
LRD
system
LRD light sensor module

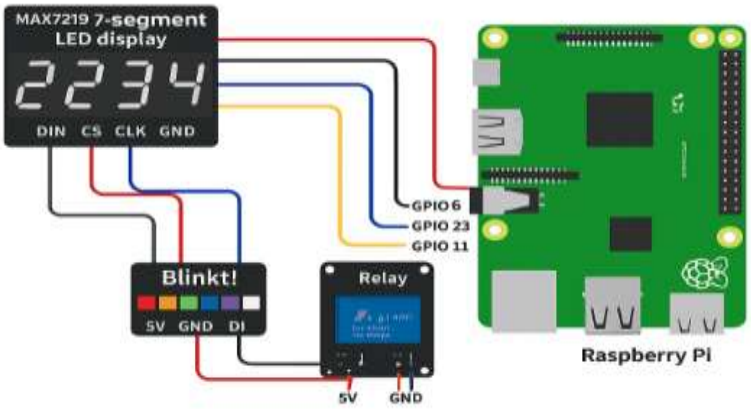
MAX7219 7-segment
LED display
2234
DIN CS CLK GND
GPIO 6
GPIO 23
GPIO 11
Blinkt!
5V GND DI
Relay
5V GND
Raspberry Pi

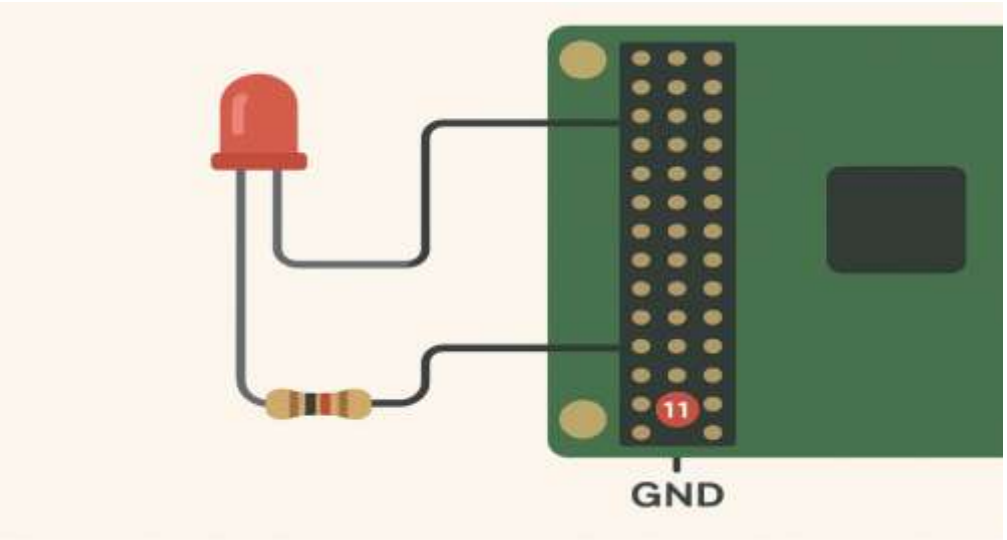
11
GND

COM3
Send
1
0
1
1
1
1
1
0
0
1
1
1
1
1
Autoscrol
Show timestamp
Newline
9600 baud
Clear output

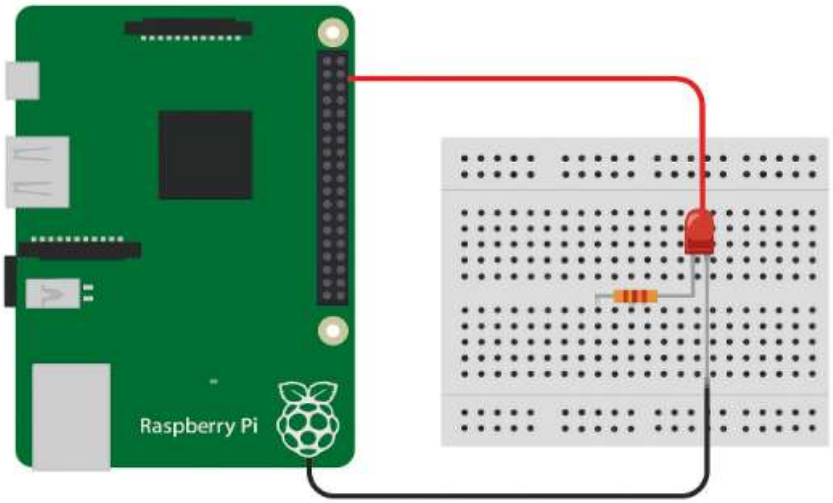
Raspberry Pi